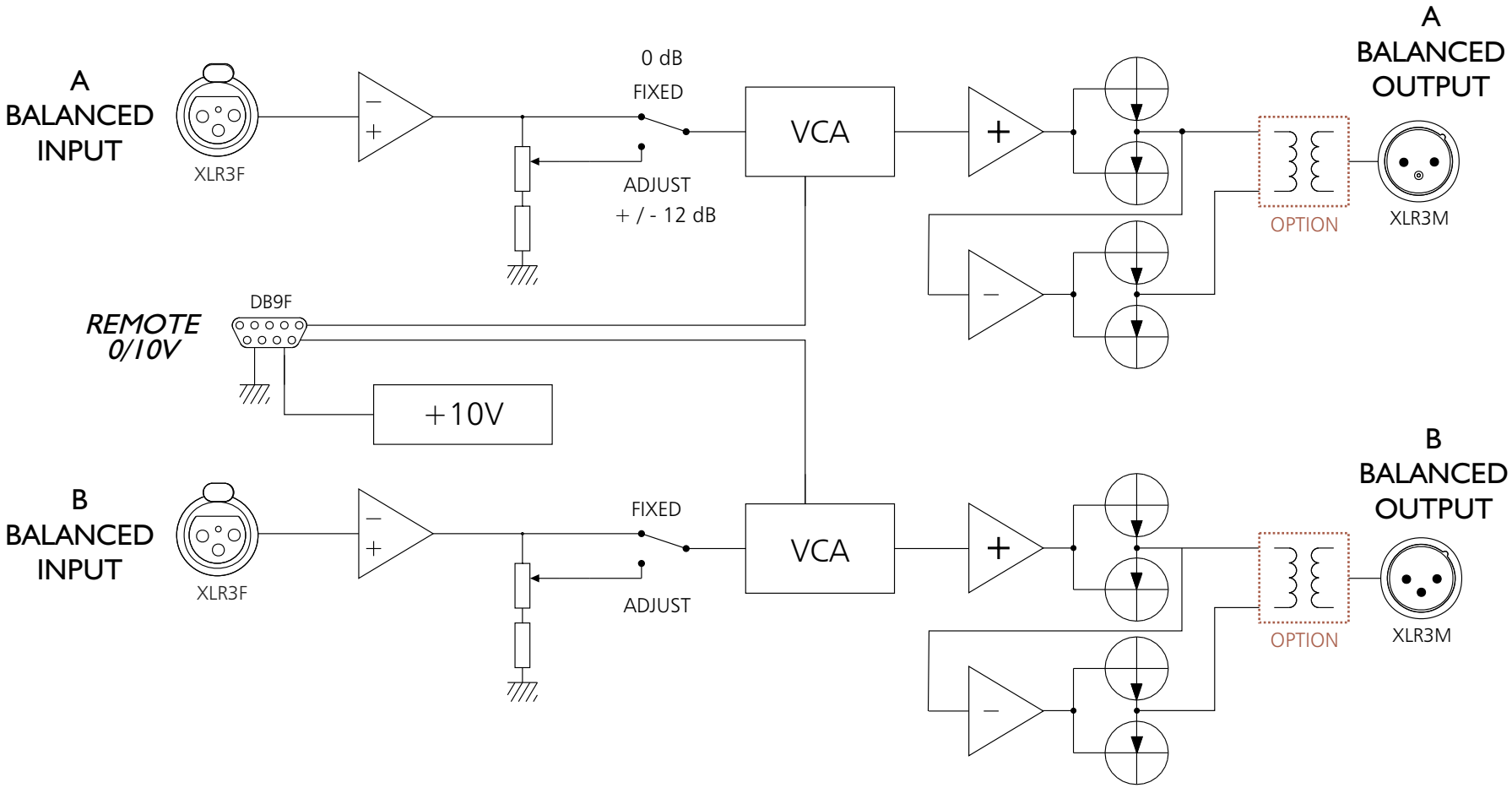
A
BALANCED
INPUT
XLR3F
0 dB
FIXED
ADJUST
+ / - 12 dB
VCA
A
BALANCED
OUTPUT
OPTION
XLR3M
REMOTE
0/10V
DB9F
+10V
B
BALANCED
INPUT
XLR3F
FIXED
ADJUST
VCA
B
BALANCED
OUTPUT
OPTION
XLR3M