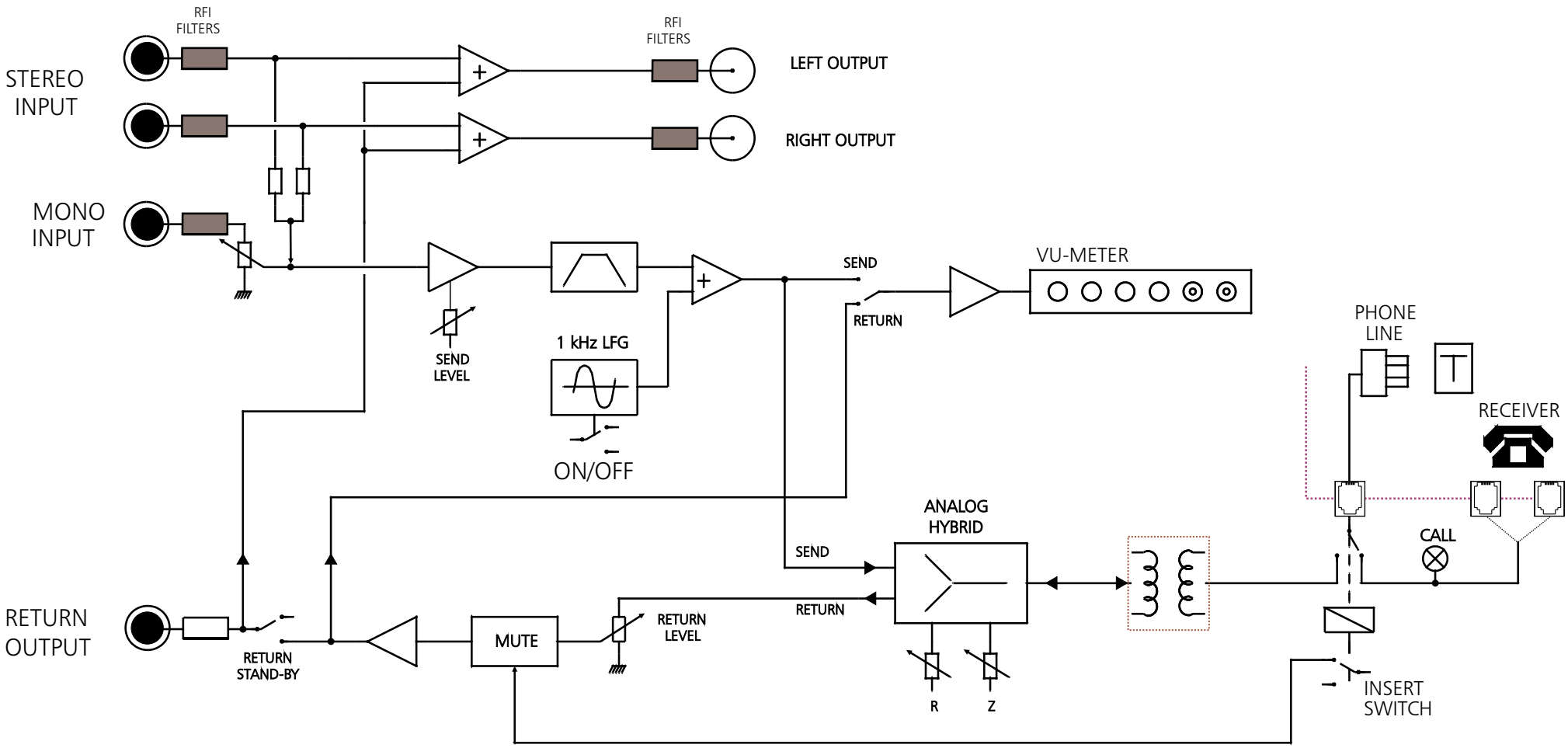
RFI FILTERS
RFI FILTERS
STEREO INPUT
LEFT OUTPUT
RIGHT OUTPUT
MONO INPUT
SEND
VU-METER
RETURN
SEND LEVEL
1 kHz LFG
ON/OFF
PHONE LINE
RECEIVER
ANALOG HYBRID
CALL
SEND
RETURN
RETURN OUTPUT
RETURN STAND-BY
MUTE
RETURN LEVEL
R
Z
INSERT SWITCH