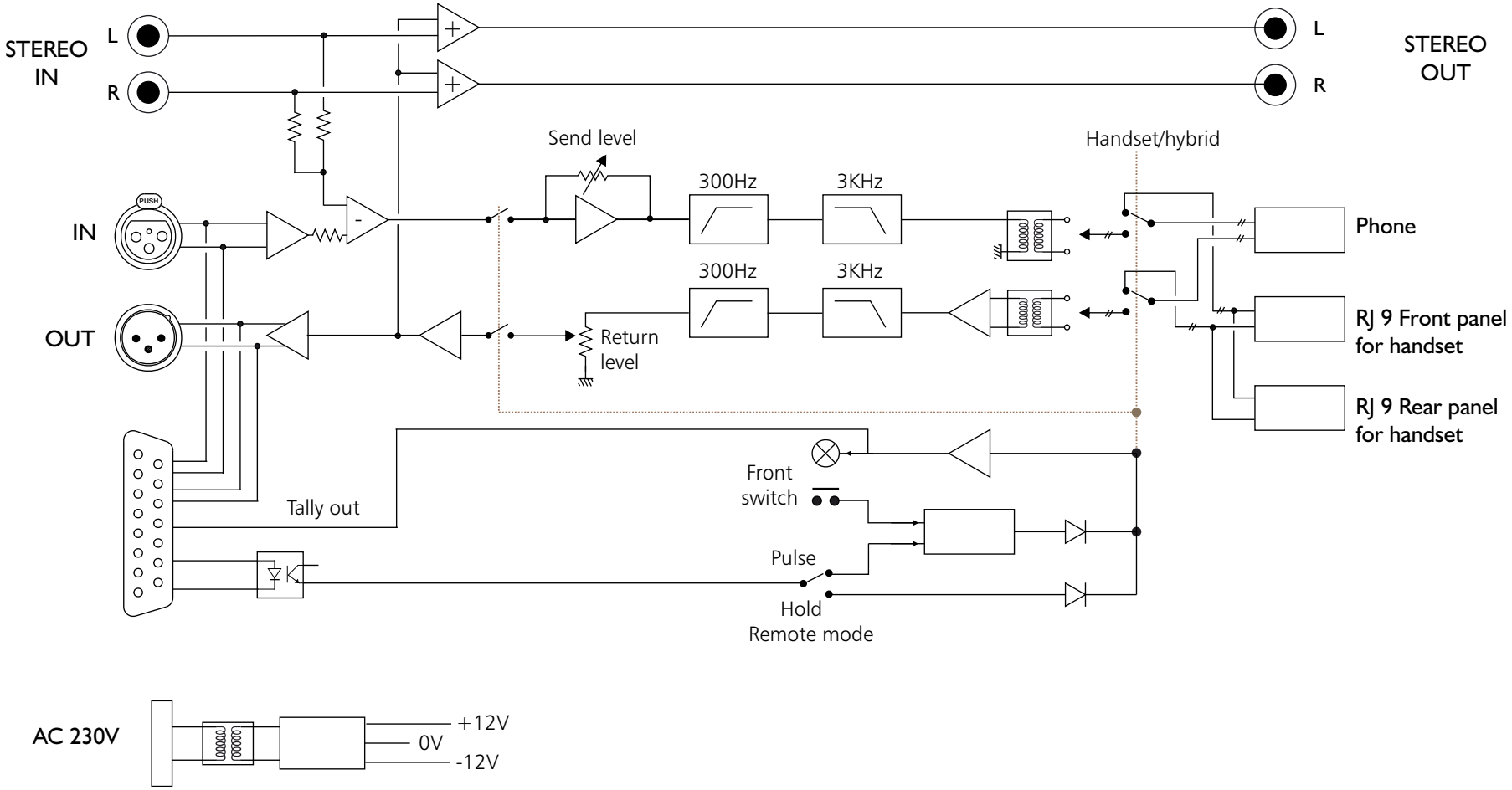
STEREO IN
L
R
STEREO OUT
L
R
Send level
Handset/hybrid
300Hz
3KHz
300Hz
3KHz
IN
PUSH
OUT
Return level
Phone
RJ 9 Front panel for handset
RJ 9 Rear panel for handset
Tally out
Front switch
Pulse
Hold
Remote mode
AC 230V
+12V
0V
-12V