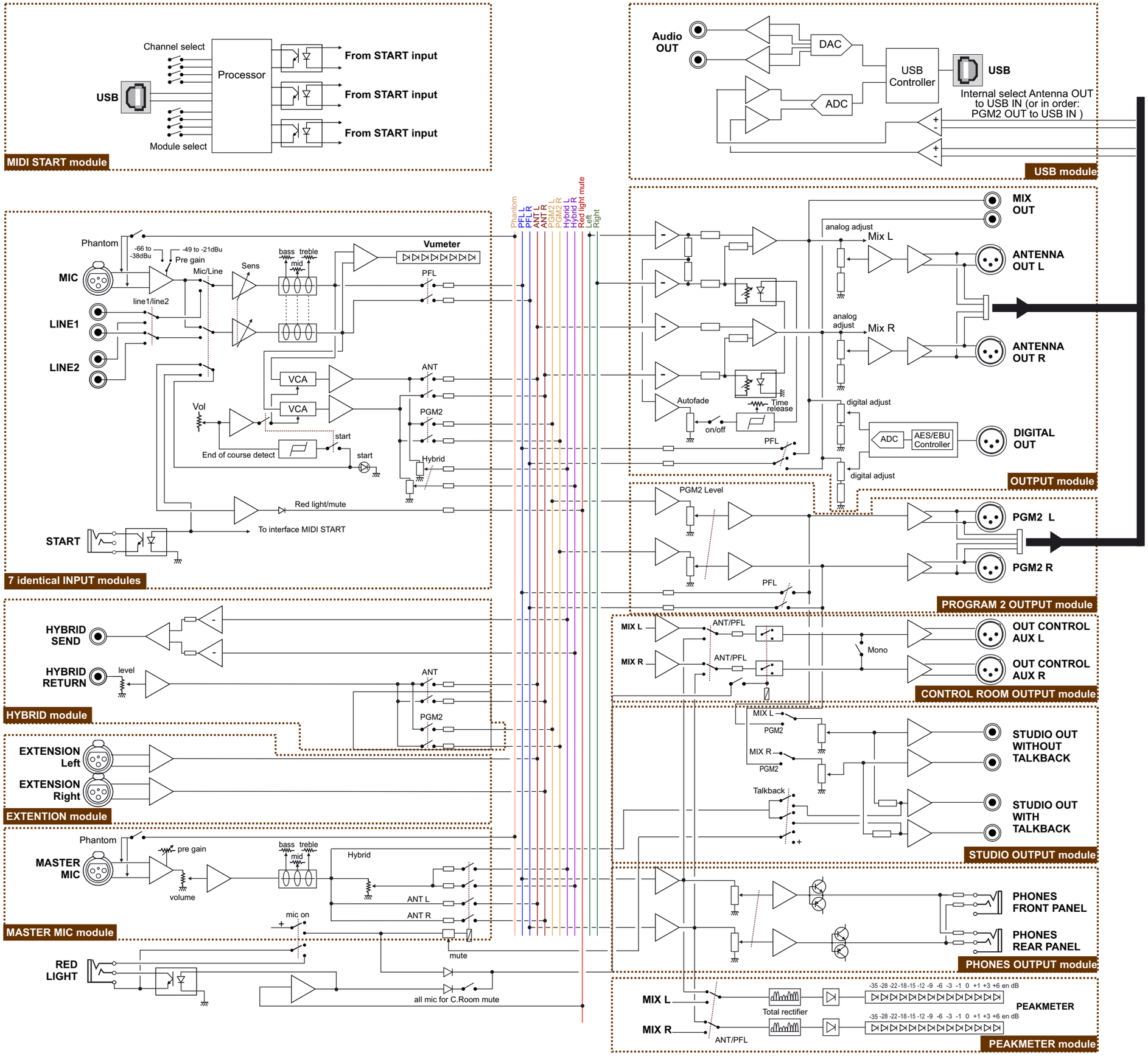
MIDI START module
Channel select
Processor
USB
Module select
From START input
From START input
From START input
USB module
Audio OUT
DAC
ADC
USB Controller
USB
Internal select Antenna OUT to USB IN (or in order: PGM2 OUT to USB IN)
7 identical INPUT modules
Phantom
-66 to -38dBu
-49 to -21dBu
Pre gain
Mic/Line
MIC
line1/line2
LINE1
LINE2
Sens
bass
treble
mid
Vumeter
PFL
VCA
VCA
ANT
PGM2
Hybrid
Vol
start
End of course detect
start
Red light/mute
To interface MIDI START
START
Phantom
PFL L
PFL R
ANT L
ANT R
PGM2 L
PGM2 R
Hybrid L
Hybrid R
Red light mute
Left
Right
OUTPUT module
analog adjust
Mix L
analog adjust
Mix R
Autofade
on/off
Time release
digital adjust
ADC
AES/EBU Controller
digital adjust
PFL
MIX OUT
ANTENNA OUT L
ANTENNA OUT R
DIGITAL OUT
PROGRAM 2 OUTPUT module
PGM2 Level
PFL
PGM2 L
PGM2 R
HYBRID module
HYBRID SEND
HYBRID RETURN
level
ANT
PGM2
CONTROL ROOM OUTPUT module
MIX L
MIX R
ANT/PFL
ANT/PFL
Mono
OUT CONTROL AUX L
OUT CONTROL AUX R
EXTENTION module
EXTENSION Left
EXTENSION Right
STUDIO OUTPUT module
MIX L
PGM2
MIX R
PGM2
Talkback
STUDIO OUT WITHOUT TALKBACK
STUDIO OUT WITH TALKBACK
MASTER MIC module
Phantom
MASTER MIC
pre gain
volume
bass
treble
mid
Hybrid
ANT L
ANT R
mic on
mute
RED LIGHT
all mic for C.Room mute
PHONES OUTPUT module
PHONES FRONT PANEL
PHONES REAR PANEL
PEAKMETER module
MIX L
MIX R
ANT/PFL
Total rectifier
-35 -28 -22 -18 -15 -12 -9 -6 -3 -1 0 +1 +3 +6 en dB
PEAKMETER