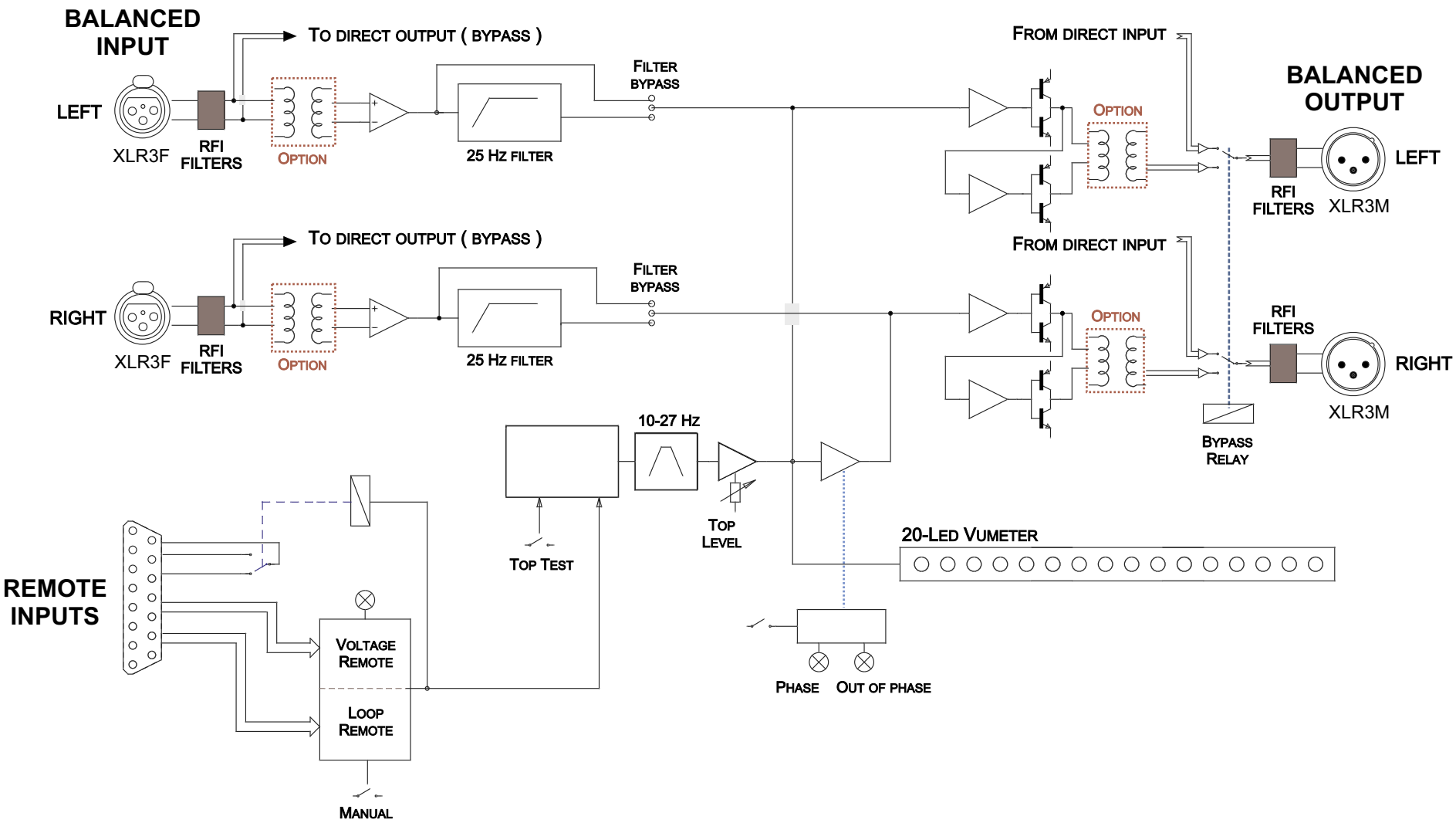
BALANCED INPUT
LEFT
XLR3F
RFI FILTERS
OPTION
TO DIRECT OUTPUT (BYPASS)
25 HZ FILTER
FILTER BYPASS
RIGHT
XLR3F
RFI FILTERS
OPTION
TO DIRECT OUTPUT (BYPASS)
25 HZ FILTER
FILTER BYPASS
FROM DIRECT INPUT
OPTION
FROM DIRECT INPUT
OPTION
BALANCED OUTPUT
LEFT
RFI FILTERS
XLR3M
RIGHT
RFI FILTERS
XLR3M
BYPASS RELAY
10-27 HZ
TOP LEVEL
TOP TEST
20-LED VUMETER
REMOTE INPUTS
VOLTAGE REMOTE
LOOP REMOTE
MANUAL
PHASE
OUT OF PHASE