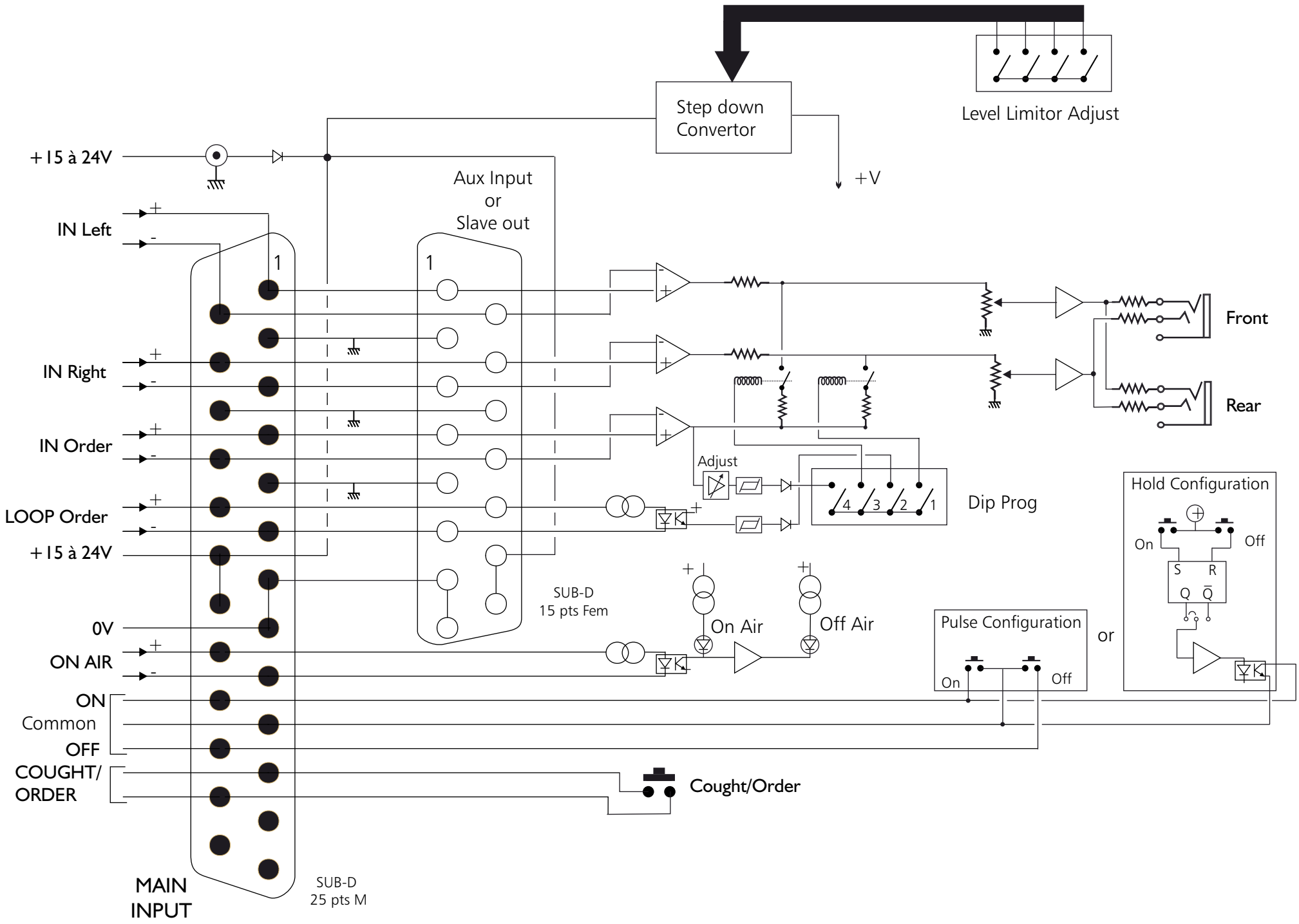
Step down
Convertor
Level Limitor Adjust
+V
+15 à 24V
IN Left
IN Right
IN Order
LOOP Order
+15 à 24V
0V
ON AIR
ON
Common
OFF
COUGHT/
ORDER
MAIN
INPUT
SUB-D
25 pts M
Aux Input
or
Slave out
SUB-D
15 pts Fem
Adjust
Dip Prog
4
3
2
1
On Air
Off Air
Front
Rear
Hold Configuration
On
Off
S
R
Q
Q̄
Pulse Configuration
On
Off
or
Cought/Order