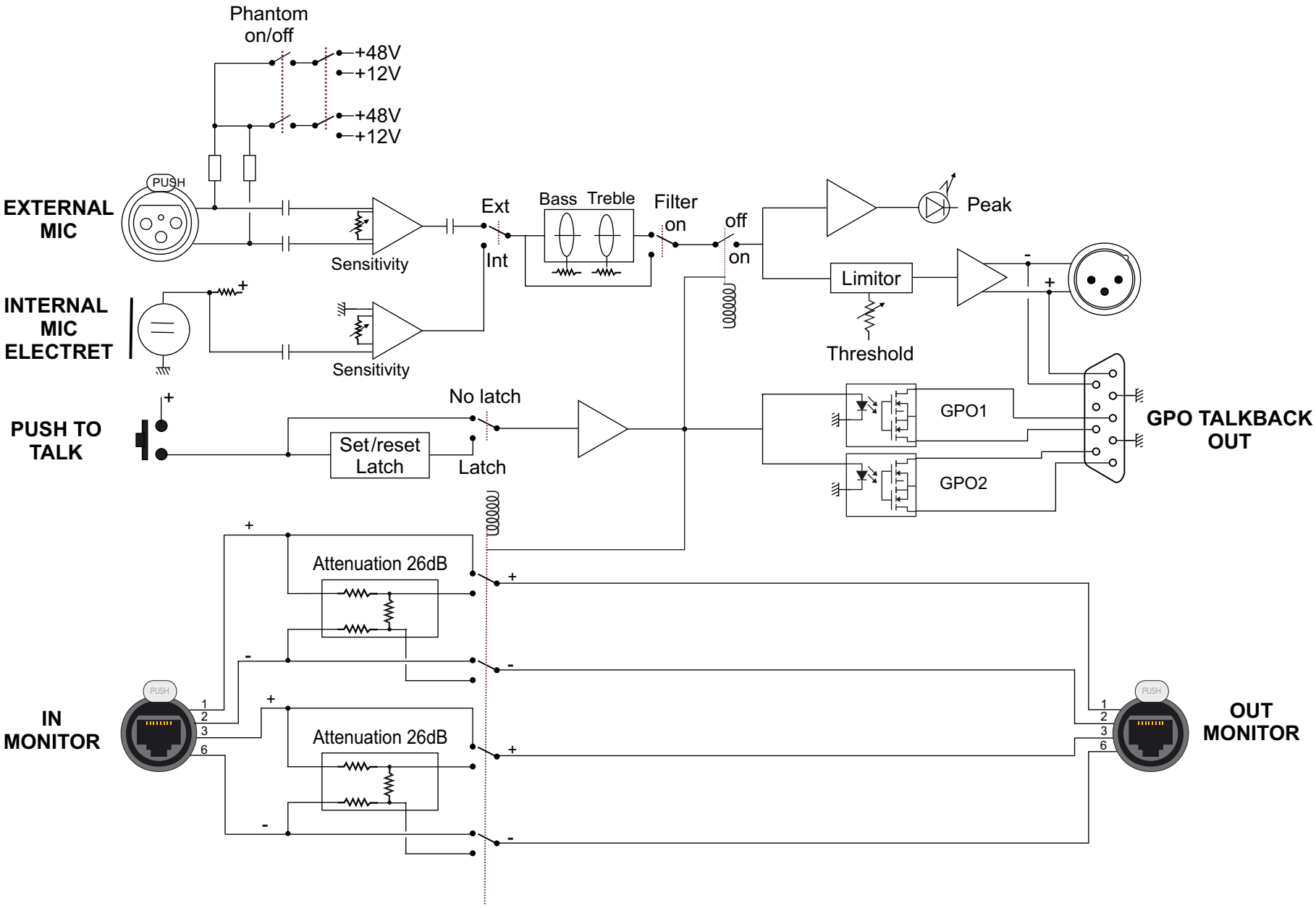
Phantom
on/off
+48V
+12V
+48V
+12V
EXTERNAL
MIC
PUSH
Sensitivity
Ext
Int
Bass
Treble
Filter
on
off
on
Peak
Limitor
Threshold
INTERNAL
MIC
ELECTRET
Sensitivity
PUSH TO
TALK
No latch
Set/reset
Latch
Latch
GPO1
GPO2
GPO TALKBACK
OUT
Attenuation 26dB
Attenuation 26dB
IN
MONITOR
OUT
MONITOR