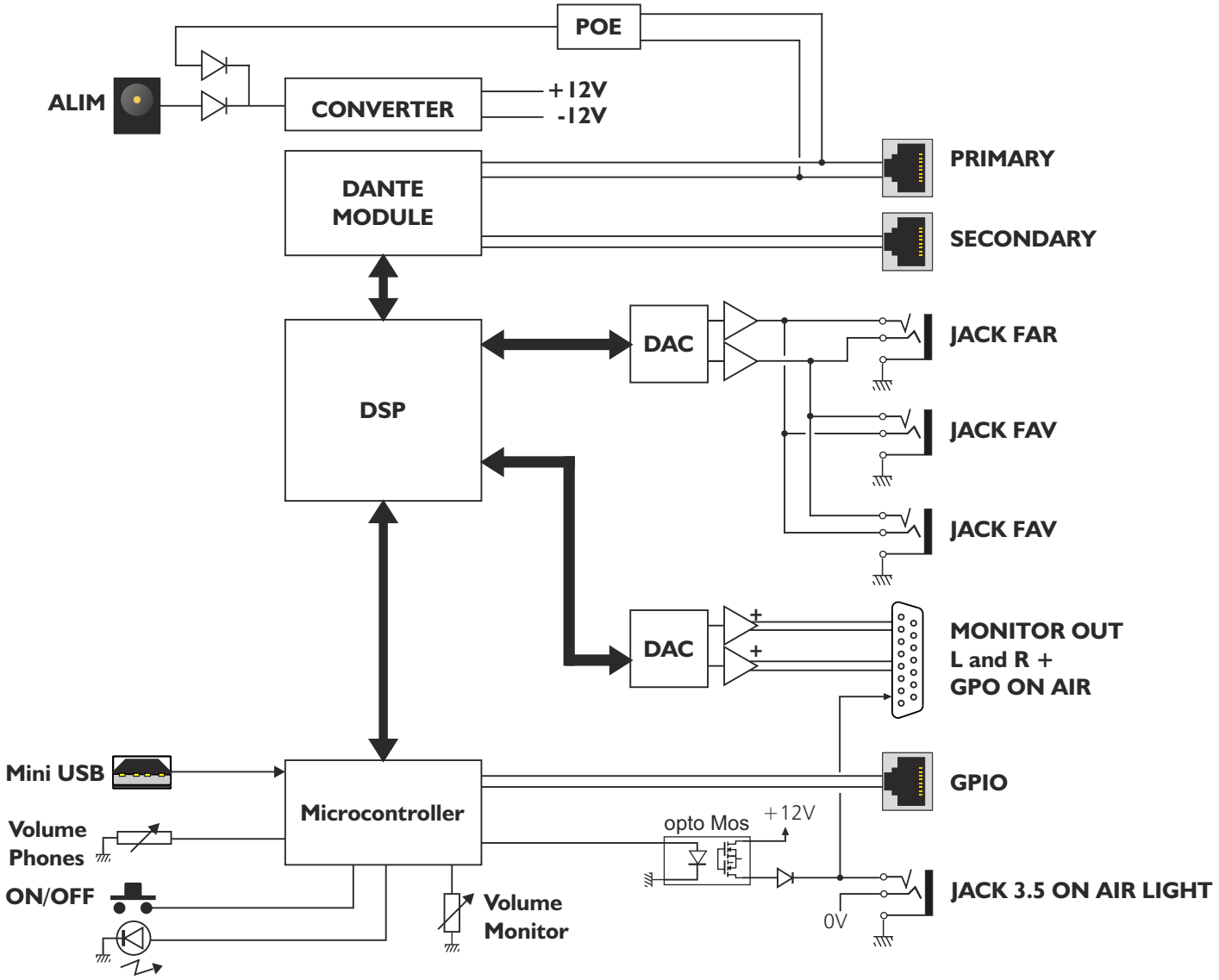
POE
ALIM
CONVERTER
+12V
-12V
DANTE MODULE
PRIMARY
SECONDARY
DSP
DAC
JACK FAR
JACK FAV
JACK FAV
DAC
MONITOR OUT
L and R +
GPO ON AIR
Mini USB
Microcontroller
GPIO
Volume Phones
opto Mos
+12V
ON/OFF
Volume Monitor
0V
JACK 3.5 ON AIR LIGHT

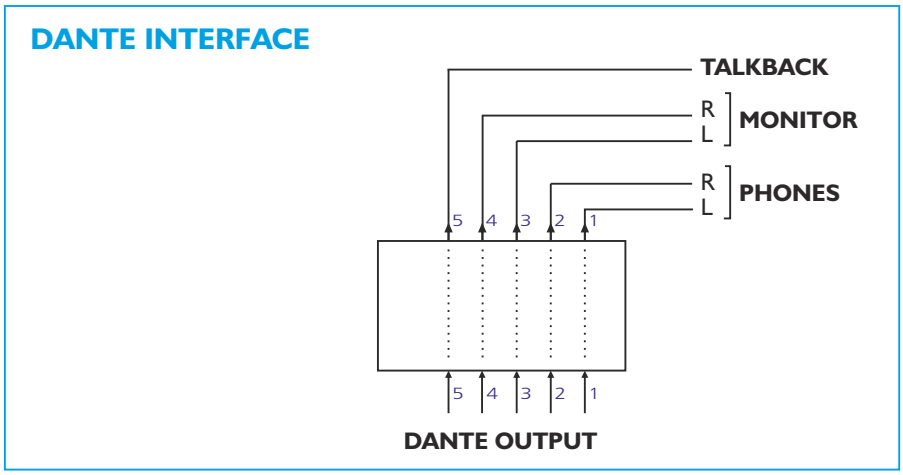
DANTE INTERFACE
TALKBACK
R
L
MONITOR
R
L
PHONES
5 4 3 2 1
5 4 3 2 1
DANTE OUTPUT