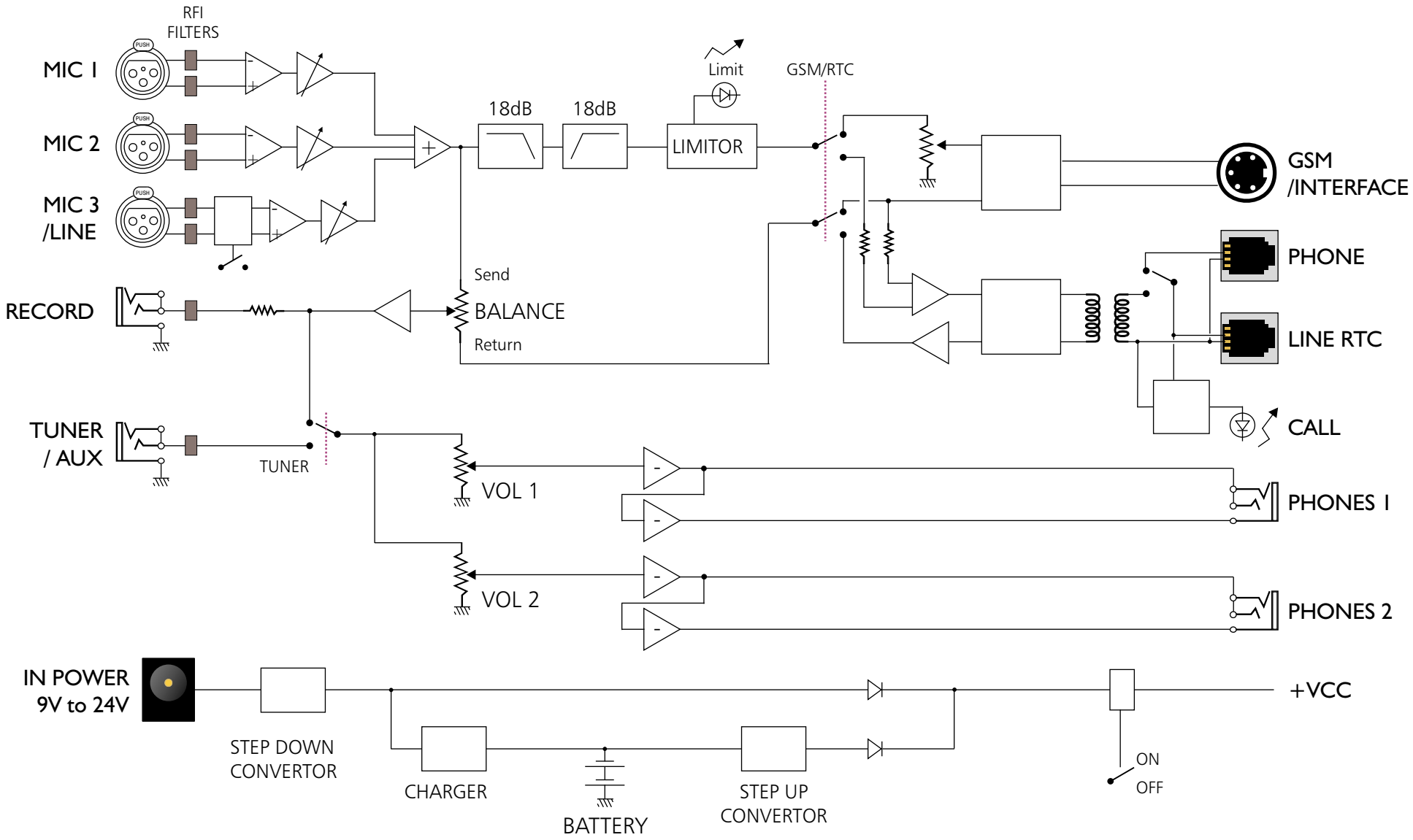
RFI
FILTERS
MIC 1
MIC 2
MIC 3
/LINE
18dB
18dB
Limit
LIMITOR
GSM/RTC
GSM
/INTERFACE
PHONE
LINE RTC
CALL
Send
BALANCE
Return
RECORD
TUNER
/ AUX
TUNER
VOL 1
VOL 2
PHONES 1
PHONES 2
IN POWER
9V to 24V
STEP DOWN
CONVERTOR
CHARGER
BATTERY
STEP UP
CONVERTOR
+VCC
ON
OFF