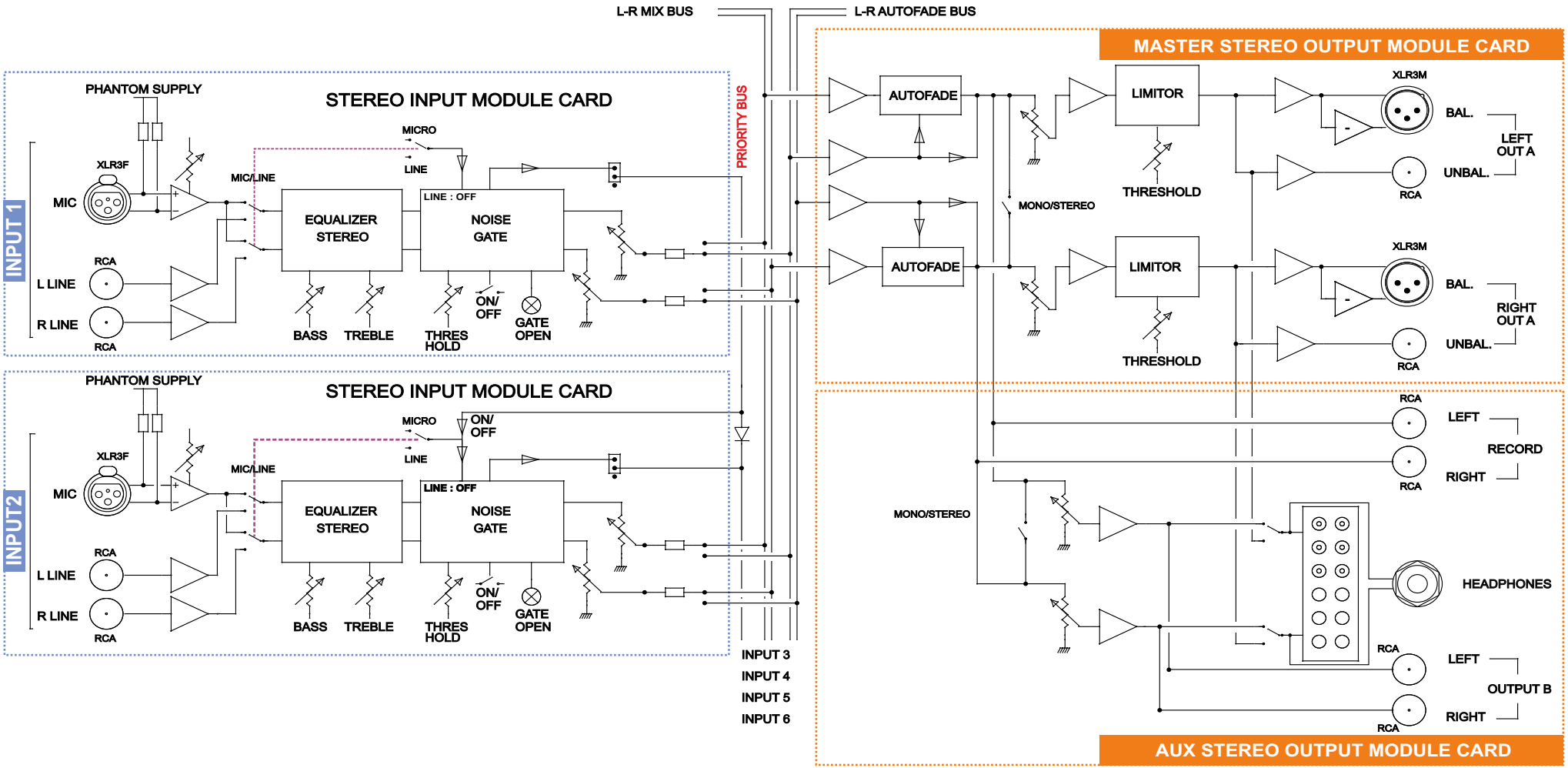
L-R MIX BUS
L-R AUTOFADE BUS
MASTER STEREO OUTPUT MODULE CARD
STEREO INPUT MODULE CARD
PHANTOM SUPPLY
INPUT 1
XLR3F
MIC
RCA
L LINE
R LINE
MIC/LINE
MICRO
LINE
LINE : OFF
EQUALIZER
STEREO
NOISE
GATE
BASS
TREBLE
THRES
HOLD
ON/
OFF
GATE
OPEN
PRIORITY BUS
AUTOFADE
MONO/STEREO
LIMITOR
THRESHOLD
XLR3M
BAL.
UNBAL.
LEFT
OUT A
RIGHT
OUT A
STEREO INPUT MODULE CARD
INPUT2
INPUT 3
INPUT 4
INPUT 5
INPUT 6
LEFT
RIGHT
RECORD
HEADPHONES
OUTPUT B
AUX STEREO OUTPUT MODULE CARD