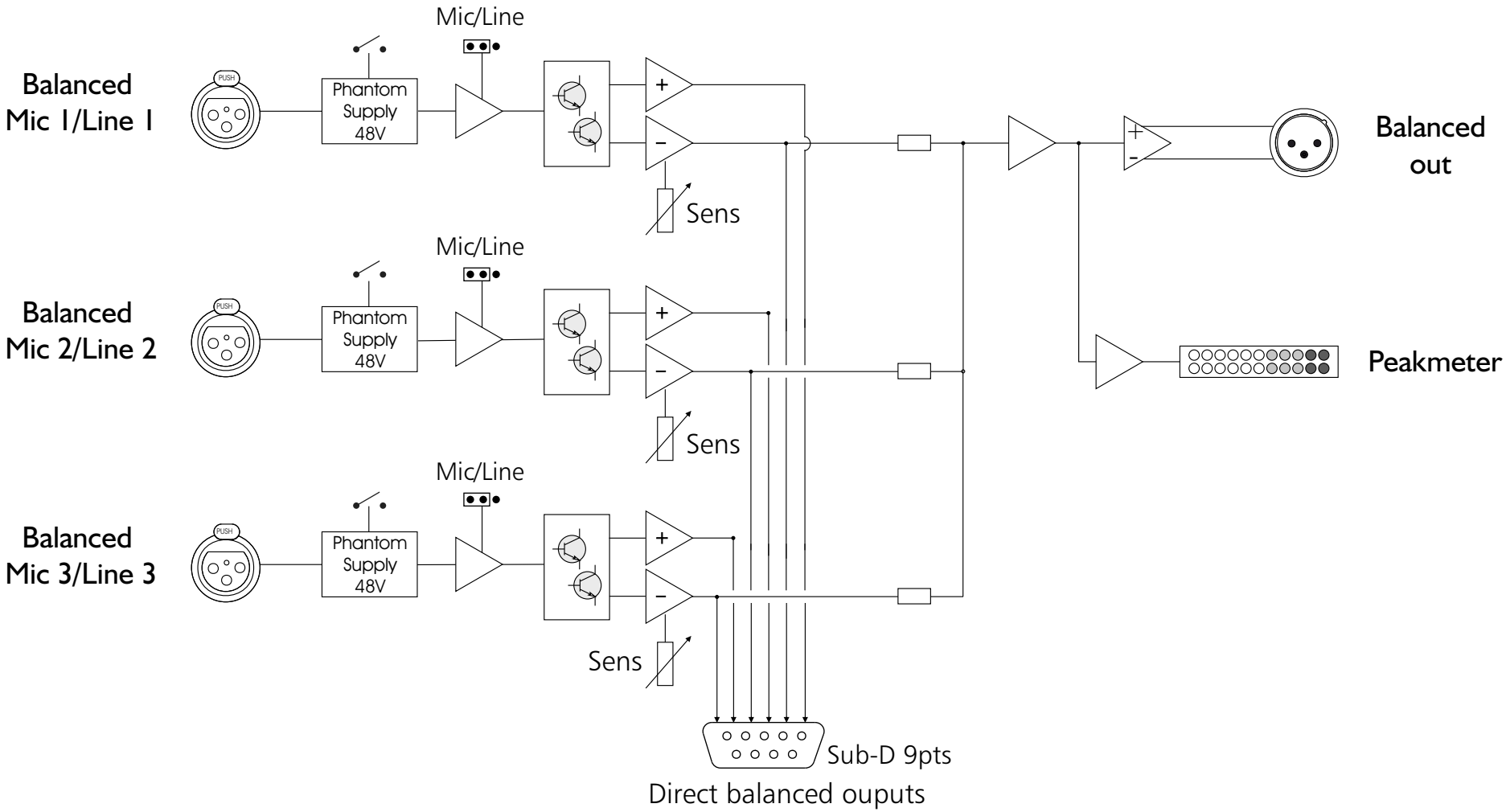
Balanced
Mic 1/Line 1
PUSH
Phantom
Supply
48V
Mic/Line
+
–
Sens
Balanced
Mic 2/Line 2
PUSH
Phantom
Supply
48V
Mic/Line
+
–
Sens
Balanced
Mic 3/Line 3
PUSH
Phantom
Supply
48V
Mic/Line
+
–
Sens
Sub-D 9pts
Direct balanced ouputs
+
–
Balanced
out
Peakmeter