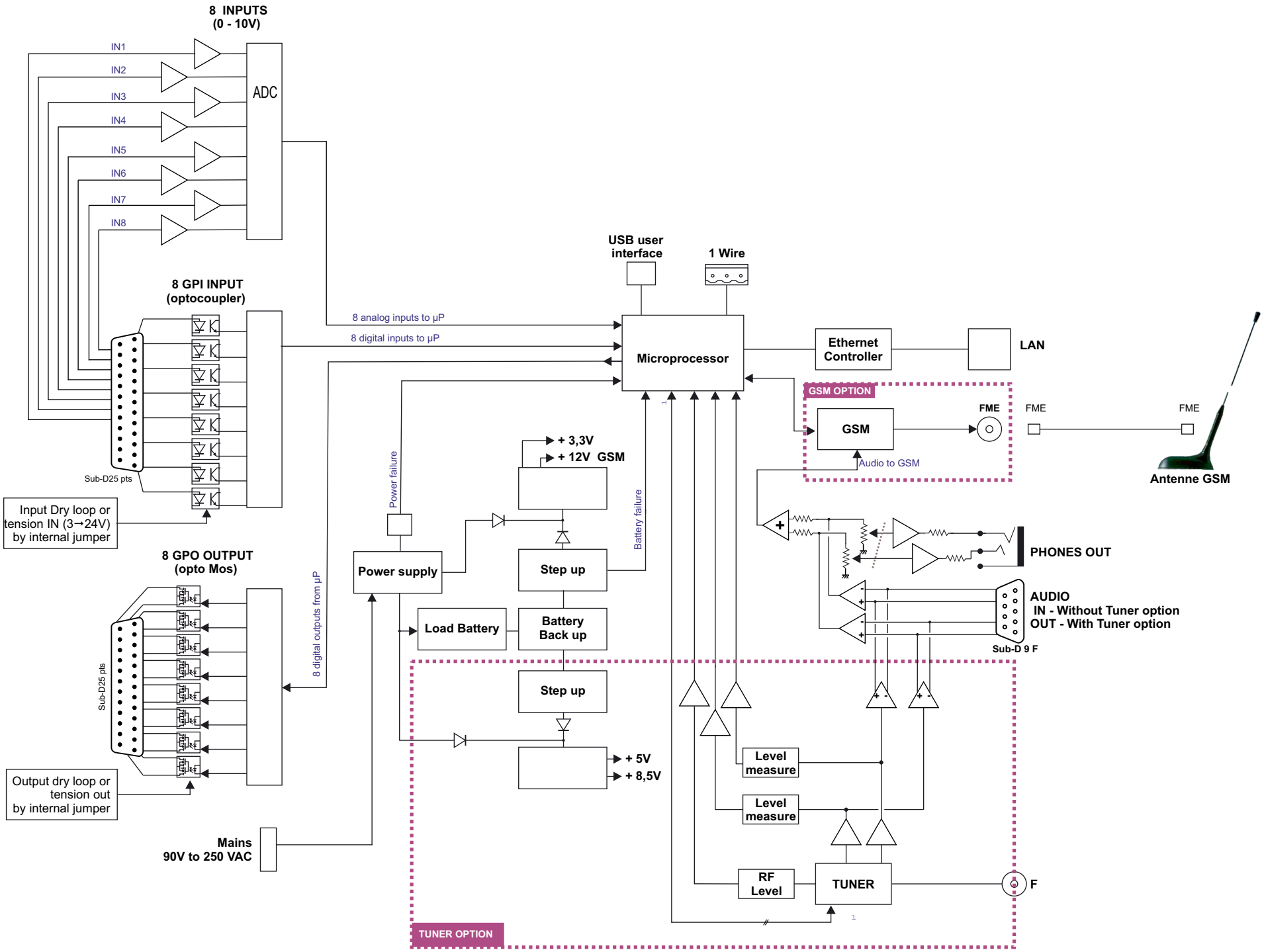
8 INPUTS
(0 - 10V)
IN1
IN2
IN3
IN4
IN5
IN6
IN7
IN8
ADC
8 GPI INPUT
(optocoupler)
Sub-D25 pts
Input Dry loop or
tension IN (3→24V)
by internal jumper
8 GPO OUTPUT
(opto Mos)
Sub-D25 pts
Output dry loop or
tension out
by internal jumper
8 digital outputs from µP
Mains
90V to 250 VAC
8 analog inputs to µP
8 digital inputs to µP
USB user
interface
1 Wire
Microprocessor
Ethernet
Controller
LAN
GSM OPTION
GSM
FME
FME
FME
Audio to GSM
Antenne GSM
Power failure
Battery failure
+ 3,3V
+ 12V GSM
Power supply
Step up
Load Battery
Battery
Back up
Step up
+ 5V
+ 8,5V
PHONES OUT
AUDIO
IN - Without Tuner option
OUT - With Tuner option
Sub-D 9 F
Level
measure
Level
measure
RF
Level
TUNER
F
TUNER OPTION