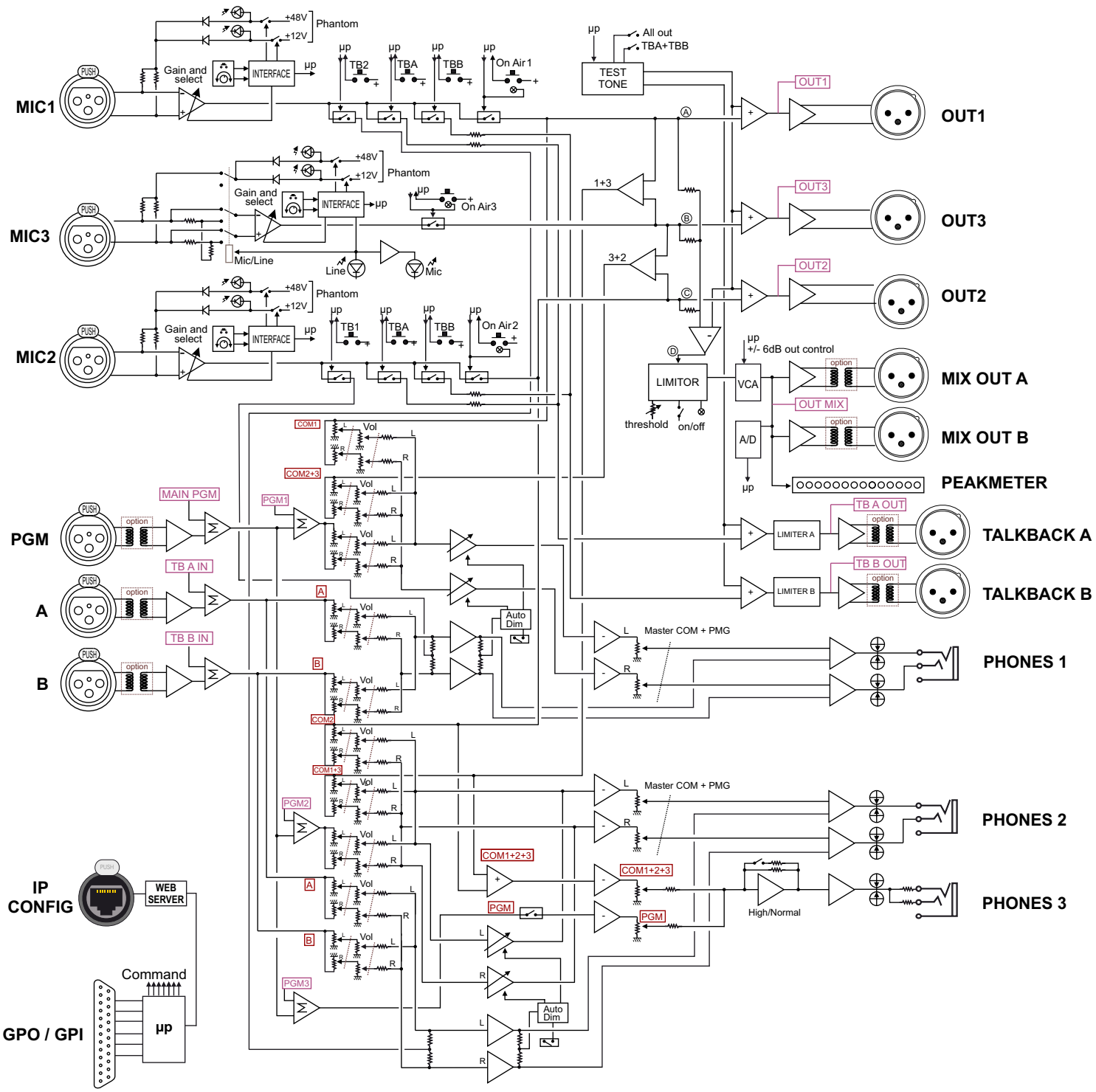
MIC1
MIC3
MIC2
PUSH
Gain and select
INTERFACE
+48V
+12V
Phantom
µp
TB2
TBA
TBB
On Air1
On Air3
On Air2
TB1
Mic/Line
Line
Mic
TEST TONE
All out
TBA+TBB
OUT1
OUT3
OUT2
1+3
3+2
LIMITOR
threshold
on/off
VCA
+/- 6dB out control
OUT MIX
A/D
MIX OUT A
MIX OUT B
PEAKMETER
TB A OUT
TB B OUT
LIMITER A
LIMITER B
TALKBACK A
TALKBACK B
PGM
A
B
MAIN PGM
TB A IN
TB B IN
option
COM1
COM2+3
PGM1
COM2
COM1+3
PGM2
PGM3
Vol
Auto Dim
Master COM + PMG
PHONES 1
PHONES 2
PHONES 3
COM1+2+3
PGM
High/Normal
IP CONFIG
WEB SERVER
Command
GPO / GPI
IN POWER
CONVERTER
+Vcc
0V
-Vcc
OPTION : INTERFACE DANTE
OUT MIX
OUT3
OUT2
OUT1
MAIN PGM
PGM1
PGM2
PGM3
TB B OUT
TB A OUT
TB A IN
TB B IN
4/4
2/2
DANTE OUTPUT
DANTE INPUT