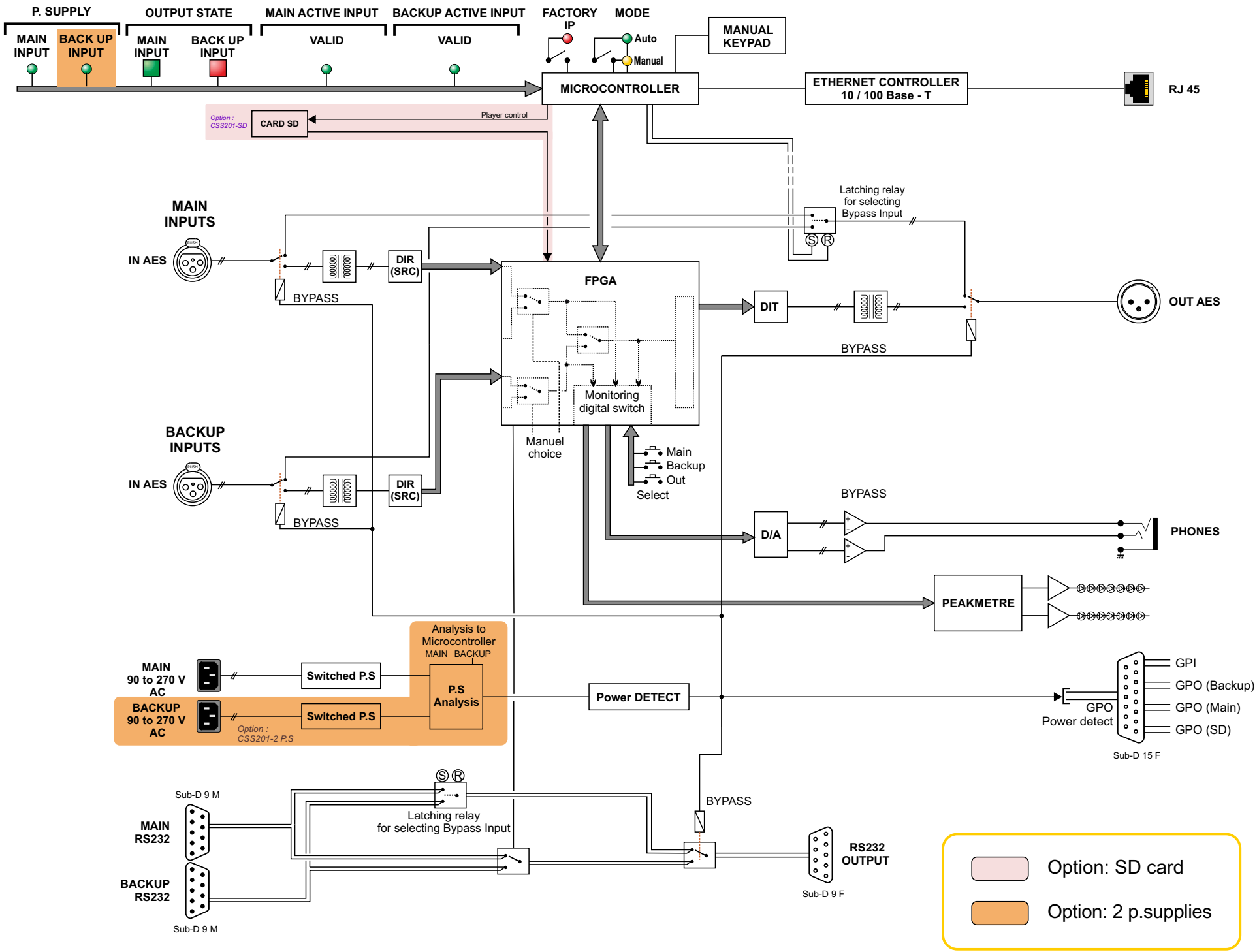
P. SUPPLY
MAIN INPUT
BACK UP INPUT
OUTPUT STATE
MAIN INPUT
BACK UP INPUT
MAIN ACTIVE INPUT
VALID
BACKUP ACTIVE INPUT
VALID
FACTORY IP
MODE
Auto
Manual
MANUAL KEYPAD
MICROCONTROLLER
ETHERNET CONTROLLER 10 / 100 Base - T
RJ 45
Option : CSS201-SD
CARD SD
Player control
MAIN INPUTS
IN AES
BYPASS
DIR (SRC)
FPGA
Latching relay for selecting Bypass Input
DIT
OUT AES
BYPASS
Monitoring digital switch
Manuel choice
Main
Backup
Out
Select
BACKUP INPUTS
IN AES
BYPASS
DIR (SRC)
BYPASS
D/A
PHONES
PEAKMETRE
Analysis to Microcontroller
MAIN BACKUP
MAIN 90 to 270 V AC
Switched P.S
P.S Analysis
Power DETECT
BACKUP 90 to 270 V AC
Switched P.S
Option : CSS201-2 P.S
GPI
GPO (Backup)
GPO (Main)
GPO (SD)
GPO Power detect
Sub-D 15 F
Sub-D 9 M
MAIN RS232
BACKUP RS232
Sub-D 9 M
Latching relay for selecting Bypass Input
BYPASS
RS232 OUTPUT
Sub-D 9 F
Option: SD card
Option: 2 p.supplies