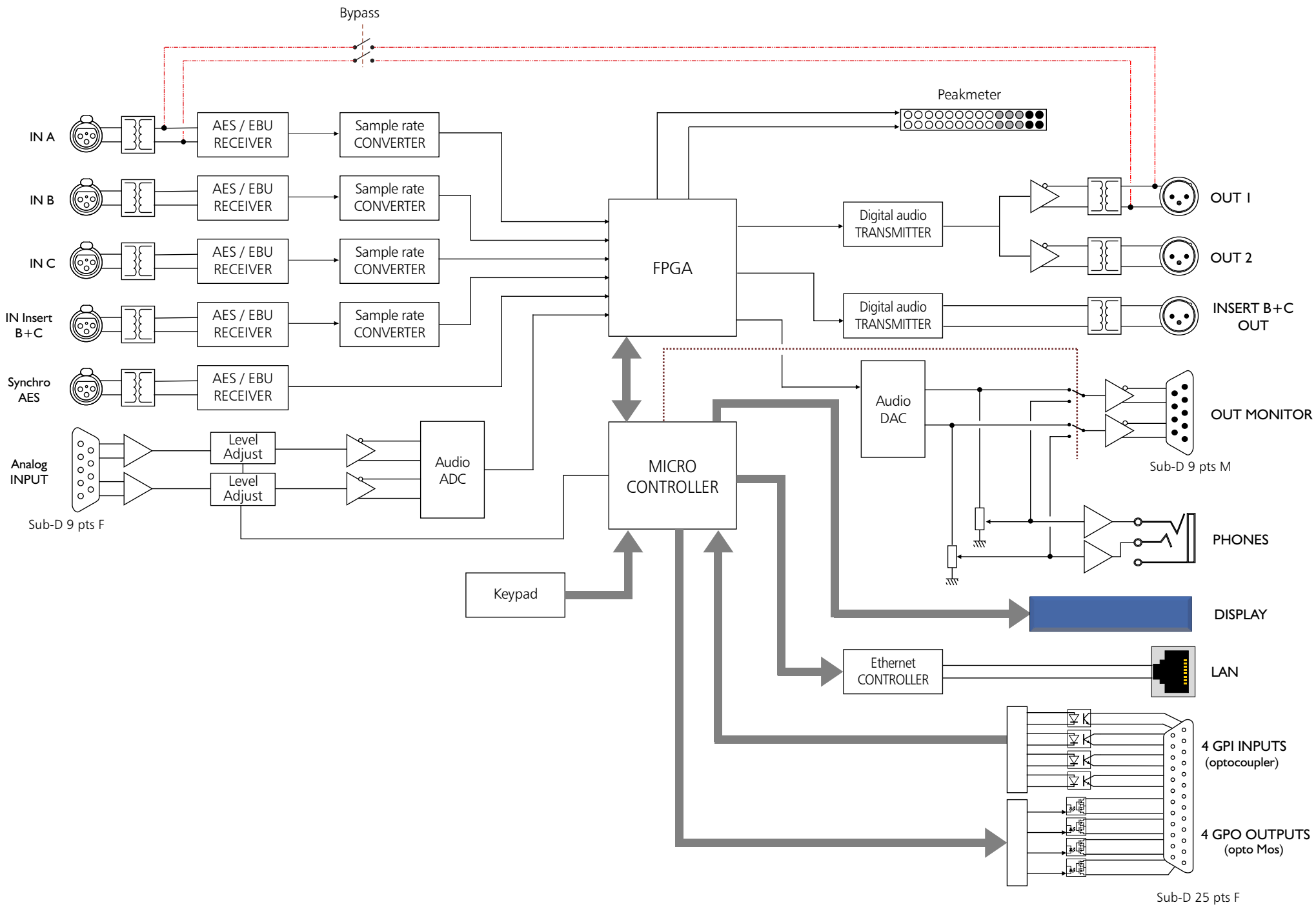
Bypass
Peakmeter
IN A
IN B
IN C
IN Insert B+C
Synchro AES
Analog INPUT
Sub-D 9 pts F
AES / EBU RECEIVER
Sample rate CONVERTER
Level Adjust
Audio ADC
FPGA
MICRO CONTROLLER
Keypad
Digital audio TRANSMITTER
Audio DAC
Ethernet CONTROLLER
OUT 1
OUT 2
INSERT B+C OUT
OUT MONITOR
Sub-D 9 pts M
PHONES
DISPLAY
LAN
4 GPI INPUTS (optocoupler)
4 GPO OUTPUTS (opto Mos)
Sub-D 25 pts F