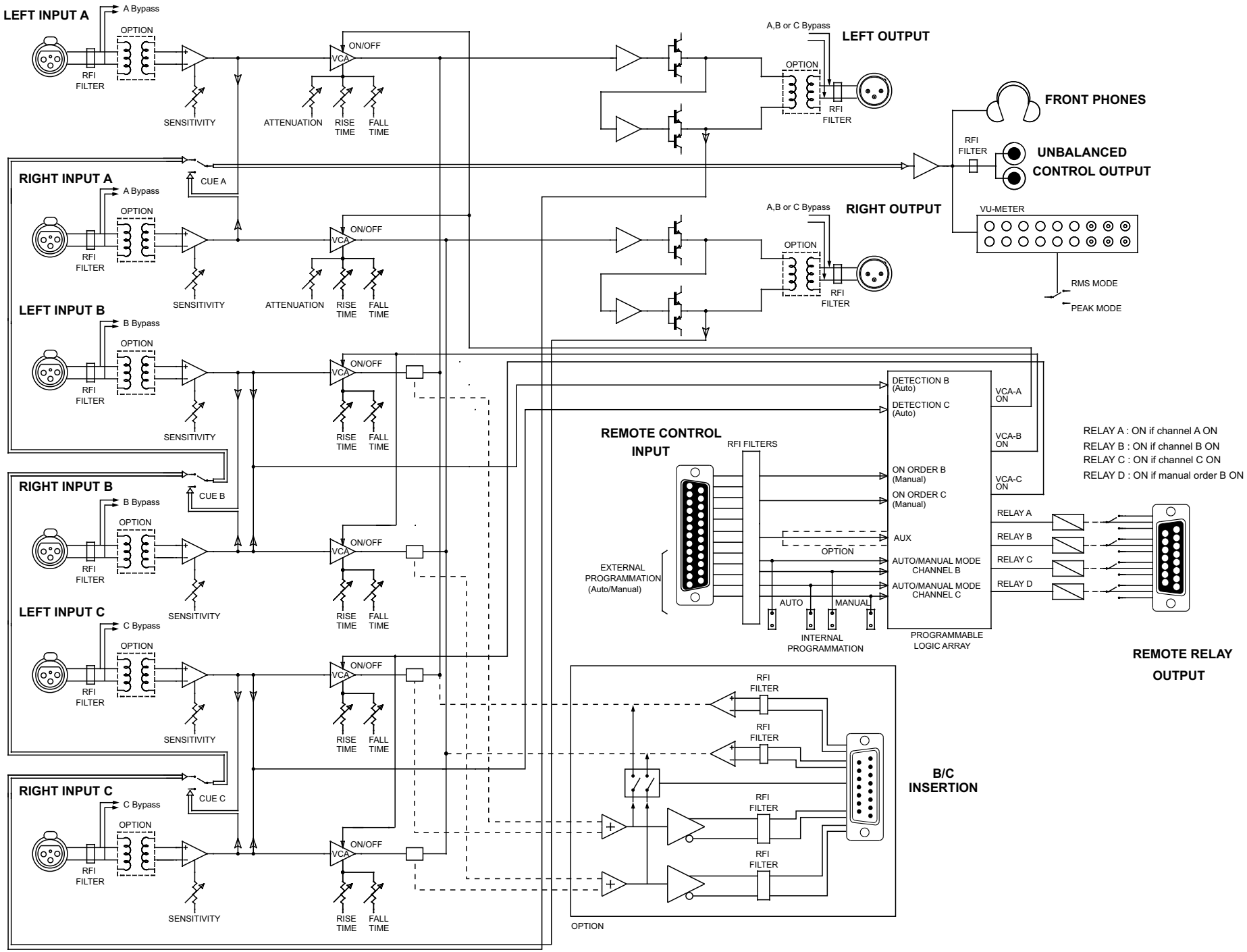
LEFT INPUT A
A Bypass
OPTION
RFI FILTER
SENSITIVITY
ON/OFF
VCA
ATTENUATION
RISE TIME
FALL TIME
A,B or C Bypass
LEFT OUTPUT
OPTION
RFI FILTER
FRONT PHONES
RFI FILTER
UNBALANCED CONTROL OUTPUT
CUE A
RIGHT INPUT A
A Bypass
OPTION
RFI FILTER
SENSITIVITY
ATTENUATION
RISE TIME
FALL TIME
ON/OFF
VCA
A,B or C Bypass
RIGHT OUTPUT
OPTION
RFI FILTER
VU-METER
RMS MODE
PEAK MODE
LEFT INPUT B
B Bypass
OPTION
RFI FILTER
SENSITIVITY
ON/OFF
VCA
RISE TIME
FALL TIME
DETECTION B (Auto)
DETECTION C (Auto)
VCA-A ON
VCA-B ON
VCA-C ON
REMOTE CONTROL INPUT
RFI FILTERS
ON ORDER B (Manual)
ON ORDER C (Manual)
AUX
OPTION
AUTO/MANUAL MODE CHANNEL B
AUTO/MANUAL MODE CHANNEL C
EXTERNAL PROGRAMMATION (Auto/Manual)
AUTO
MANUAL
INTERNAL PROGRAMMATION
PROGRAMMABLE LOGIC ARRAY
RELAY A : ON if channel A ON
RELAY B : ON if channel B ON
RELAY C : ON if channel C ON
RELAY D : ON if manual order B ON
RELAY A
RELAY B
RELAY C
RELAY D
REMOTE RELAY OUTPUT
RIGHT INPUT B
CUE B
B Bypass
OPTION
RFI FILTER
SENSITIVITY
ON/OFF
VCA
RISE TIME
FALL TIME
LEFT INPUT C
C Bypass
OPTION
RFI FILTER
SENSITIVITY
ON/OFF
VCA
RISE TIME
FALL TIME
RFI FILTER
RFI FILTER
RFI FILTER
RFI FILTER
B/C INSERTION
OPTION
RIGHT INPUT C
CUE C
C Bypass
OPTION
RFI FILTER
SENSITIVITY
ON/OFF
VCA
RISE TIME
FALL TIME